Operating Instructions
X75 Fusion Splicer Series 8000

CORNING

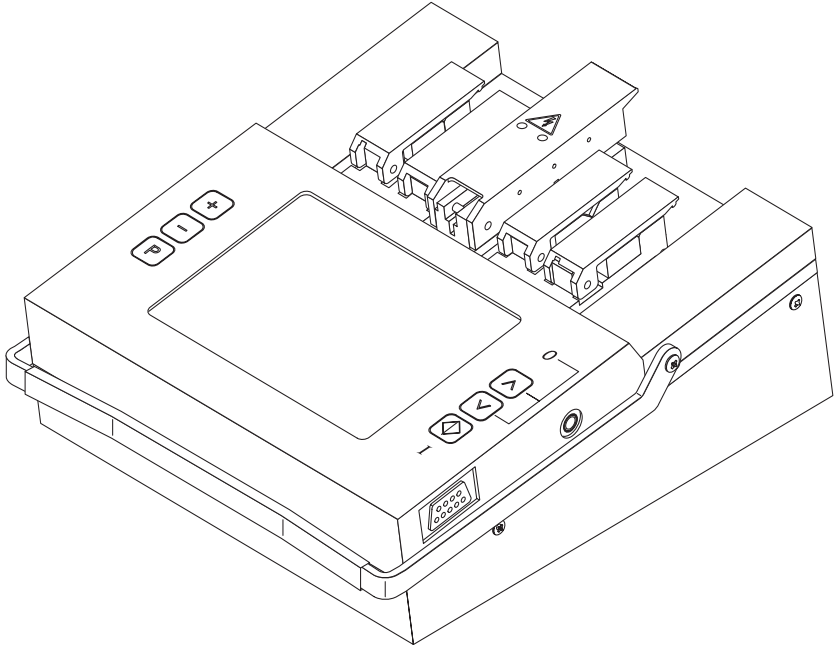

Subject to change without notice. Subject to availability.

Issued by Corning Cable Systems GmbH & Co. KG · Profilstraße 4 · D-58093 Hagen · Germany
Tel. +49-2331-3571145, 3571146, 3571155 or 3571402 · Fax +49-2331-3571309

© 2001 by Corning Cable Systems GmbH & Co. KG
Printed in Germany

revision: 06/01
Order No.: S46999-L6063-P451

Contents

1 X75 Fusion Splicer, Overview

2 Preparatiss

3 Parameters and Programs

4 Splicing

5 Ending of Operation

6 Troubleshooting and Maintenance

7 Supplements / Changes / Notices

Index

Appendix A: Accessories

Important

Please read these operating instructions carefully to ensure that your fusion splicer functions flawlessly, and that it fulfills your expectations. Perform all necessary service and maintenance work on your fusion splicer regularly with the help of this manual. At most care should be exercised in order to prevent damage.

If you have any queries whatsoever, please contact the trained specialists at your service center.

Improper or insufficient maintenance may impair the operating performance of your fusion splicer.

All liability borne by the manufacturer, as well as the guarantee, are null and void if the fusion splicer is tampered with by unauthorized persons.

NOTE	For reasons of clarity, these operating instructions do not provide detailed information for all versions of the product and cannot, therefore, take every possible installation, operation or maintenance situation into consideration. If you require further information, or if particular problems arise which are not covered in enough detail in the operating instructions, do not hesitate to contact the Corning Equipment Service Department for the necessary information. These operating instructions do not form part of a previous or existing agreement, commitment or legal relationship, nor are they intended to amend or modify any such arrangement. All obligations on the part of Corning arise exclusively from the relevant sales contract which also contains the only valid and comprehensive warranty conditions. The operating instructions neither extend nor limit the contractual warranty conditions.

Addresses

If your fusion splicer requires service please send it to:

Siemens Dematic AG
SD EA 32 / Geräteservice
Warenannahme
Rupert-Mayer Straße 44

D-81359 Munich, Germany

Tel. +49-89-72222068
Fax +49-89-72248324

If you have technical questions or questions regarding our training program, please contact:

Corning Cable Systems GmbH & Co. KG
Abteilung PLM TS
Profilstraße 4

D-58093 Hagen, Germany

Tel. +49-2331-3571145, 3571146, 3571155 or 3571402
Fax +49-2331-3571309

Definitions for Terminology used in Warnings

The following definitions apply to the terminology used in the warnings:

Danger — In these operating instructions, as well as in warnings on the products themselves, this term means that death, serious injury or substantial property damage will result if the relevant precautions are not observed.

Warning — In these operating instructions, as well as in warnings on the products themselves, this term means that death, serious injury or substantial property damage may result if the relevant precautions are not observed.

Caution — In these operating instructions, as well as in warnings on the products themselves, this term means that slight injury or property damage may result if the relevant precautions are not observed.

Note — In these operating instructions, this term makes reference to important information about the product, or the relevant part of the operating instructions to which particular attention must be paid.

Qualified Personnel — In these operating instructions, as well as in warnings on the products themselves, this term means persons who are familiar with start-up, operation and maintenance of electrical equipment, and who are suitably qualified for the work they perform.

DANGER	When electrical equipment is operated, certain parts of such equipment are bound to reach hazardous voltage levels. If the appropriate warnings are not observed, serious injury or property damage may occur. Only suitably qualified personnel should work on this equipment or in its vicinity. Such personnel must be entirely familiar with all of the warnings and maintenance procedures included in these operating instructions. Flawless, safe operation of this device is only possible if it has been properly transported, stored, assembled, and installed, as well as correctly operated and maintained.

Password Request

Activating the Password Request

The fusion splicer must be opened in order to activate or deactivate the password request.

DANGER

The fusion splicer or electrically operated accessories may only be opened by suitably qualified personnel.
Switch the fusion splicer off and disconnect it from the power supply (power supply plug and 12V battery supply)!

Two phillips head screws are located on the left of the housing and two on the right. These must be removed in order to open the housing. The switch for activating and deactivating password request is on the printed circuit board visible once the housing has been opened (switch in ON position: password request activated).

If password request is deactivated, the stored password is deleted as soon as the fusion splicer is switched on again. However, if you reactivate password request without having previously switched the fusion splicer on and off, the old password is retained.

No password is stored when request is reactivated. A new password must therefore first be defined.

Entering the password

A password consists of an arbitrary sequence of five input keys. If you attempt to change a parameter when password request is activated, the message “Enter Password” appears. If an incorrect password is entered, the parameter change is not saved to memory. This also applies to a change of password, i.e. a new password cannot be defined unless the current

password is known. To redefine the password, select the parameter “Password” and proceed according to the following flow chart.

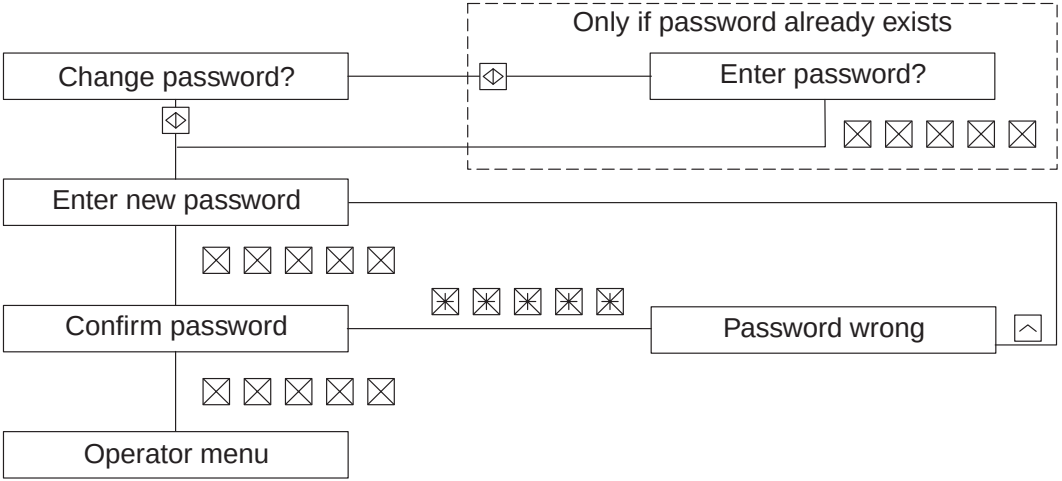

1 X75 Fusion Splicer, Overview

Contents Page

General 1-2
Equipment Overview 1-3
- Splicing Unit 1-4
- L-PAS Video Image Evaluation System 1-4
- Monitor 1-5
- Keyboard 1-5
- Terminals for Additional Functions 1-6

Technical Data 1-7

General

The X75 Fusion Splicer is suitable for producing reliable, low-loss splices of optical fibers. It can be used for all common single-mode and multimode fibers with a cladding diameter of 125 µm and coating diameters of 250 to 900 µm.

Due to its L-PAS (Lens-Profile Alignment System) video image evaluation with two CCD cameras and an optic system, the X75 Fusion Splicer enables the fiber alignment, end face quality inspection, fiber offset detection, contamination detection and splice loss estimation during fully atomatic splice procedure by the press of one button.

Equipment Overview

1 Power Supply Port
2 Heat-Shrink Oven Socket
3 Splicing Unit
4 Keyboard
5 Monitor
6 Ports for Additional Functions

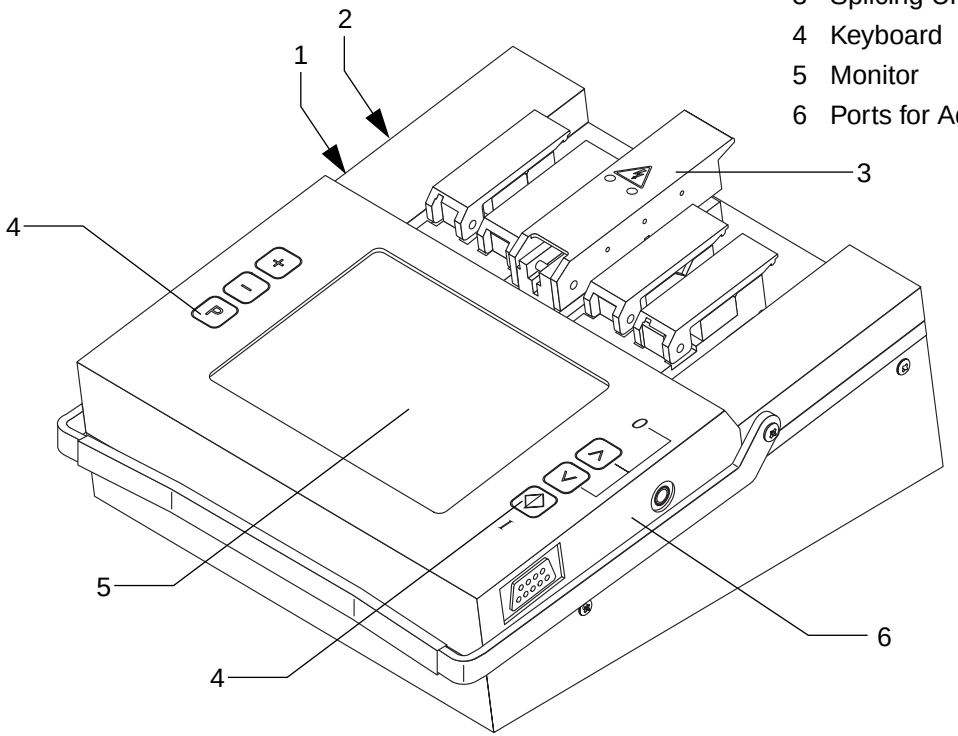

Splicing Unit

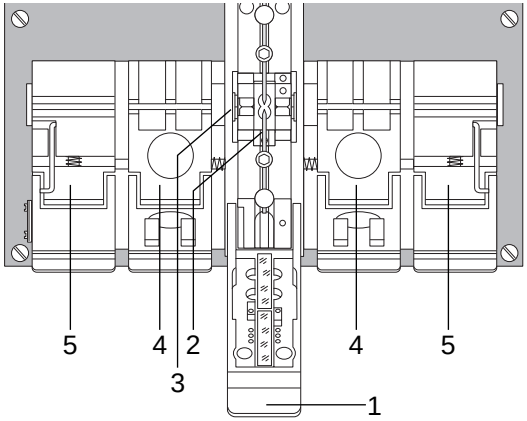

1 Electrode Flap
2 Electrodes
3 Fiber guides (silicon v-grooves)
4 Holder flaps
5 Clamping flaps

L-PAS Video Image Evaluation System

The X75 Fusion Splicer is equipped with the L-PAS Video Image Evaluation System.

The position and quality of the fiber ends are evaluated by a video image evaluation system which uses two cameras and a magnifying optic.

By evaluating the video image of both fiber views, the fiber endface quality, dirt and mechanical damages as well as fiber offset are detected, a fast fiber alignment is enabled and the splice loss is estimated.

The image of both fiber views is shown simultaneously on the monitor.

Monitor The LCD monitor shows the fibers from two different perspectives (along the X and Y axes).

Keyboard The keyboard consists of 6 keys with the following functions:

 Enter key: The displayed operation is performed or the previously entered value is acknowledged.

 Open or exit parameters menu.

 Scroll back to previous line.

 Scroll forward to next line.

 Increase displayed value.

 Reduce displayed value.

Terminals for Additional Functions

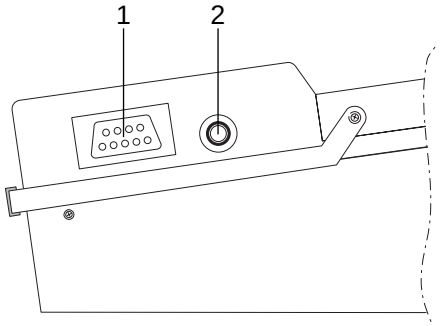

1 RS 232c Serial Interface
2 Video Output

Serial Interface

Splicing parameters or the contents of the splice data memory can be read out to a printer or a computer via the RS 232c serial interface. The serial interface at the fusion splicer is configured for use with the XON/OFF protocol. Asynchronous data transmission is accomplished with one start bit, eight data bits and one stop bit. The parity bit is not used.

Video Output

You can connect a standard European monitor (CCIR, 625 lines) with an input impedance of 75 Ω or higher to this output. Use a commercially available coaxial cable with RCA plug.

Technical Data

Fiber Requirements:	cladding diameter: 125 µm coating diameters: 250 to 900 µm
Fiber Display:	140 mm (5.5“) LCD monitor
Magnification:	approximately 100 times
Fiber Alignment:	fully automatic, automatic and manual (Z axis)
Typical splice loss for identical standard single-mode fibers:	< 0.05 dB
Tensile Test:	selectable, 2.5 N
Number of Splicing Programs:	3 fixed programs 4 special programs 10 user programs
Video Output:	CCIR Output (75 Ω)
Operating Temperature:	-5˚C to 45˚C
Storage Temperature:	-40˚C to 70˚C
Dimensions Basic Unit (L x W x H):	208 x 185 x 100 mm
Weight:	2.1 kg

2 Preparatiss

Contents Page

Putting the Fusion Splicer into Operation 2-2
Supply Power 2-2
Switching the Fusion Splicer On 2-2
Preparing the Fiber Ends 2-4
Stripping the Coating 2-4
Cleaning the Fiber 2-5
Cleaving the Fiber 2-5
Inserting the Fiber 2-6
250 µm Coating 2-6
Other Coating Diameters 2-7
Adjusting Monitor Brightness 2-7
Checking the Fiber End Faces 2-8

Putting the Fusion Splicer into Operation

DANGER — In order to assure safe operation, the fusion splicer must be placed into operation and properly operated by qualified personnel under consideration of the warnings included in these operating instructions. Non-observance may lead to death, severe bodily injury or substantial property damage.

Supply Power

Connect the fusion splicer to supply power (see operating instructions for the power pack or the rechargeable battery).

Switching the Fusion Splicer On

- Before switching the fusion splicer on, make sure that both electrodes are properly seated (see »Replacing the Electrodes« on page 6-18).

DANGER — Never switch the fusion splicer on without electrodes. The fusion splicer may otherwise be damaged!

- Press the ⏻ key to switch the fusion splicer on.
- After switching on, the software version installed is displayed at the monitor and a self-test is performed. The electrodes are automatically cleaned if selected with a cleaning arc which is carried out with closed electrode flap.
- A status report showing selected settings is displayed at the monitor.

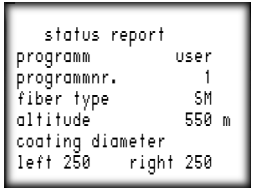

- The positioning slides are then automatically advanced to the insertion position.
- In battery mode, the charge level of the battery is displayed. If the charge level is too low to operate the unit, the “battery discharged” message appears at the monitor and the unit is switched off automatically. In this case charge the battery (see operating instructions for the rechargeable battery).

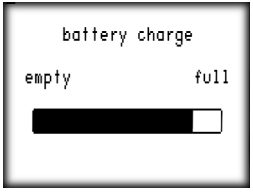

NOTE	The fusion splicer should only be operated with the battery when the black bar graph indicates more than 33% charging. Never place the fusion splicer into storage with a discharged battery. Always recharge the battery at the end of each work day.

NOTE	The fusion splicer switches off automatically in the power pack and the battery modes if no key has been activated for a given period of time. Press the ⏻ key to switch the fusion splicer back on.

Preparing the Fiber Ends

NOTE	Minimum splice loss can only be achieved if the fiber ends are prepared with great care.

Preparation of the fiber ends includes the following steps:

- Stripping the coating
- Cleaning the fibers
- Cleaving the fibers with a suitable cleaver
- Evaluating the fiber end faces at the monitor

Please refer to the operating instructions included with your cleaver.

Stripping the Coating

Remove the coating from the end of the fiber over a length of about 50 mm.

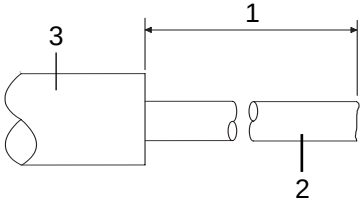

1 Stripping length (approx. 50 mm)
2 Uncoated fiber
3 Coating

Cleaning the Fiber

Clean the fiber ends over a length of approx. 100 mm (coating and uncoated fiber) with a lint-free paper towel dampened with alcohol.

DANGER	Risk of fire exists if solvents are spilled.

Cleaving the Fiber

Use a suitable cleaver, e.g. cleaver S46999-M9-A8, to cleave the fiber. Select the correct fiber guides for the cleaver (Fiber Optic Cleaver A8: Universal fiber guide for 250 to 900 µm coating diameter).

- Open the flap (pos. 4) at the cleaver and lay the fiber with coating diameter 250 µm into the cleaver such that the end the coating is aligned with the “10 mm” mark. With coating diameters greater than 250 µm align with the mark at 15.

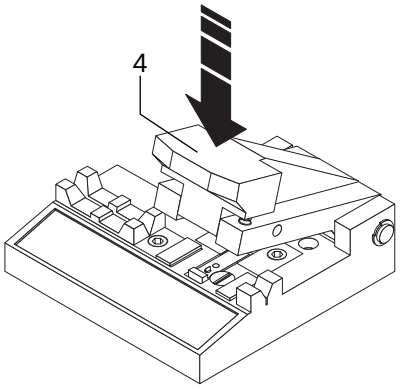

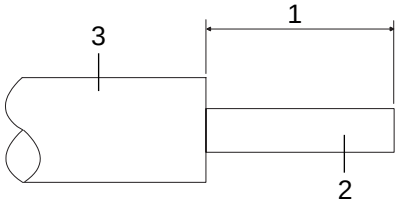

1 Cleave length: 10 mm (250 µm) or 15 mm (>250 µm)

2 Uncoated fiber

3 Coating

- Close the flap (4) at the cleaver and press it down slowly and carefully. Open the flap before removing the cleaved fiber in order to avoid damaging the fiber end face.

NOTE

If you press the flap down too quickly, you will obtain a poor quality fiber end face and the diamond blade may be damaged.

Inserting the Fiber

250 µm Coating

- Open the electrode flap (pos. 1), the holder flap (pos. 2) and the clamping flaps (pos. 3).
- Place the fiber (pos. 4) into the v-groove so that the end of the fiber lies between the electrode tips.

NOTE

Make sure that the fiber end is visible at the monitor after it has been inserted. Poor splicing quality may otherwise result, or the positioning elements may not demonstrate adequate travel.

- First close the holder flap (pos. 2).
- Hold the fiber straight to ensure that it lies within the groove of the clamping mechanism. Then close the clamping flap (pos. 3).
- Now insert the second fiber on the other side in the same manner.
- Close the electrode flap (pos. 1).

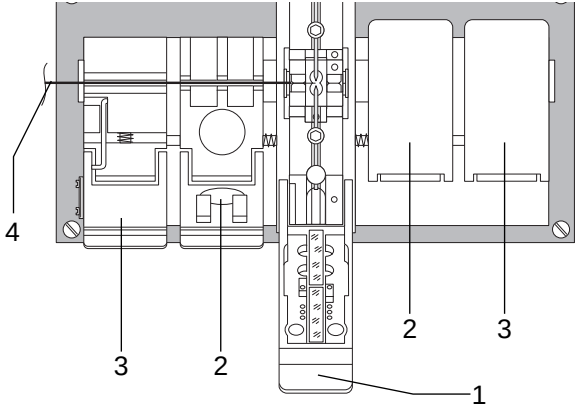

1 Electrode Flap
2 Holder Flap
3 Clamping Flaps
4 Fiber

250 µm Coating

Other Coating Diameters

- Please note that the coating diameter must be adapted in the parameter menu, see »Significance of the Parameters« on page 3-13.

Adjusting Monitor Brightness

NOTE	Monitor brightness can be only changed in the main menu.

- Press the [+] or the [−] key until the desired brightness is obtained.
  Increase monitor brightness with the [+] key.
  Decrease monitor brightness with the [−] key.

Checking the Fiber End Faces

NOTE — Good splicing results can only be obtained with good end face quality.

After inserting the fiber in the fusion splicer and before ignition of the arc, the fiber ends can be observed on the monitor.
If more time is needed select the menu item “Search fibers?” The fiber ends are moved to the center of the monitor.

The fiber ends must be:

- Clean
- Free of noses and cracks
- Flat
- Perpendicular to the fiber axis

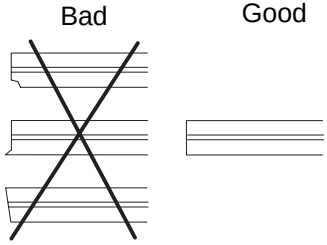

- If the quality of the endface is poor, especially when the fusion splicer gives out a warning, the fiber end must be prepared again.

NOTE — As soon as you notice that endface quality is poor, you can interrupt the alignment operation by activating the [^] key.

3 Parameters and Programs

Contents Page

““Parameter Menu“ 3-3
General 3-3
Open / Exit 3-4
“Options / Language“ Menu 3-5
Common Parameters 3-5
Language 3-7
Heat-shrink Oven 3-8
Service Data 3-9
Configuration 3-10
“Program Selection“ Menu 3-11
Program Descriptions 3-11
Creating User Programs 3-12
Editing and Renaming User Programs 3-15
Deleting User Programs 3-15
Data Output Menu 3-16
Special Program for TrueWave Fiber 3-17

Cleaving Quality 3-17
Optimizing Parameters for Single-mode Fibers 3-18
Required Accessories 3-18
General Rules 3-19
Fusion Current and Fusion Time 3-19
Ambient Temperature 3-19
Procedure 3-19
Optimizing Parameters for Multimode Fibers 3-21

“Parameter Menu“

General

Parameters can be matched to ambient conditions and to different types of fiber in the parameter menu. The parameters menu is subdivided into “Options / Languages”, “Program selection” and “Data output”.

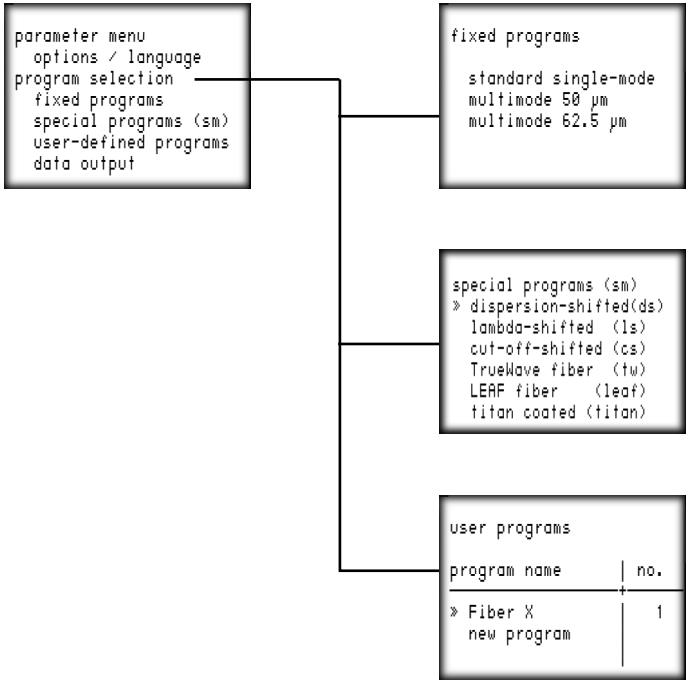

Open / Exit

The “parameter menu“ is opened by pressing the [P] key with closed electrode flap. The display returns to the main menu when the [P] key is activated from within the parameter menu (see diagram).

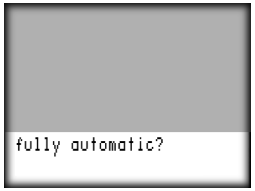

“Options / Language“ Menu

Parameters selected in the “Options / Language“ menu effect all programs.

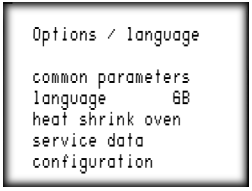

NOTE — Parameters in the “Options / Language“ menu can only be changed or reset if password query has been deactivated, or if the correct password is entered.

Common Parameters

Open menu: –› parameters menu –› options / languages –› common parameters.

Parameter	Significance	Values (default)
Password	If password query is activated, parameters can only be changed and user programs can only be deleted after the correct password has been entered. See red sheet at the beginning of chapter 1.	-

Parameter	Significance	Values (default)
Splice Memory	Stores up to 250 splice loss values. Stored values can be displayed at the monitor (see »Displaying the Splice Memory at the Monitor« on page 4-9) or printed via the serial interface (see »Data Output Menu« on page 3-16). The parameters in this menu have the following effects: **OFF:** No splice loss values are stored to memory. **Automatic:** splice loss values values are stored to memory automatically. **Manual:** The operator is requested to manually store the splice loss values after evaluation of the splice. **Delete:** The splice memory is deleted in its entirety.	off/autom./manual/ delete
Cleaning Current	Arc temperature during cleaning	10.0 to 16.0 mA
Cleaning Time	Ignition time during cleaning	0.05 to 0.30 s
Battery Disconnect Time	Elapsed time until automatic fusion splicer shut-down	2 to 60 min, 10 min

Parameter	Significance	Values (default)
Altitude above Sea Level	In order to assure uniform, high-quality splices, the selected altitude must roughly correspond to actual altitude.	0 to 4000 m, 550 m
Alarm Limit	As soon as the estimated loss value is equal to or exceeds the selected alarm limit, a brief warning signal sounds.	OFF / 0.05 to 0.2 dB

Language

Open menu: –› parameters menu –› options / languages –› language.
This function allows for selection of the desired operating language.

D	German
GB	English
F	French
E	Spanish
I	Italian
NL	Dutch
IRA	Farsi

DK	Danish
H	Hungarian
PL	Polish
CZ	Czech
C	Chinese
GUS	Russian
POR	Portuguese

Available languages depend upon the installed software version.

Heat-shrink Oven

Open menu: –› parameter menu –› options / languages –› heat-shrink oven.

Parameter	Significance	Values (default)
Heat-shrink Parameters	If you intend to control the heat-shrink oven from the fusion splicer, select “internal”. If “external” is selected, heat-shrinking is controlled by the parameters selected at the heat-shrink oven.	internal / external
Heating Time	If “internal” heat-shrink parameters have been selected, the internally selected heating time is used.	10 to 250 s in steps of 10, 60 s
Temperature	If “internal” heat-shrink parameters have been selected, the internally selected temperature is used.	80 to 150 °C, 120 °C

Service Data Open menu: –› parameter menu –› options / languages –› service data.

Parameter	Significance	Values (default)
Operating Hours	Total number of operating hours	-
Splices	Total number of splices	-
Cleaning Cycle	Number of splices performed before operator is reminded to clean the electrodes	50 to 700 in steps of 10, 500
Reset Counter: XX	Reset “Cleaning cycle” counter to 0	yes/no
Replacement Interval	Number of splices performed before operator is reminded to replace the electrodes	700 to 7000 in steps of 100, 5000
Reset Counter: XXX	Reset “Replace Electrodes” counter to 0	yes/no

Configuration Open menu: –› parameters menu –› options / languages –› device configuration

Parameter	Significance	Values (default)
Electrode Cleaning	Automatic electrode cleaning with closed electrode flap after the splicer has been switched on.	on / off
Status Report	Current settings are displayed after the splicer is switched on.	on / off
Contamination Detection Sensitivity	-	high / low

“Program Selection“ Menu

Program Descriptions

	Program		Applications
Fixed Programs	Standard Single-mode (SM)	1	For all standard, single-mode fibers (matched cladding or depressed cladding).
	Multimode 50 µm (MM50)	2	For gradient index fibers with a core diameter of 50 µm. Positioning and loss estimation are performed by video image evaluation.
	Multimode 62.5 µm (MM62)	3	For gradient index fibers with a core diameter of 62.5 µm. Positioning and loss estimation are performed by video image evaluation.
Special Programs	DS Single-mode	1	For dispersion-shifted single-mode fibers. Parameters are optimized for this fiber type.
	LS Single-mode	2	For lambda-shifted single-mode fibers. This fiber type is a refinement of the DS fiber.
	CS Single-mode	3	For cut-off-shifted single-mode fibers
	TrueWave Fibers	4	For TrueWave fibers.
	LEAF Fibers	5	For LEAF fibers.
	Titanium-Coated Single-mode	6	For standard titanium-coated single-mode fibers.

	Program	Applications
User Programs	1…10	All available programs, i.e. preset programs, special programs and already existing user programs, can be used as the basis for the creation of a new user program. The parameters from the selected program are copied into the new user program. The parameters can then be edited in the new user program. This allows for adaptation to special circumstances and additional fiber types. Up to 10 user programs can be created.

Creating User Programs

Parameters for preset and special programs cannot be changed by the user. If you need to adapt parameters to a special fiber type, a user program must first be created. Proceed as follows:

- Open the parameters menu with the [P] key.
- Select “user programs” with the [∧] or the [∨] key and acknowledge with [◇].
- Existing user programs are now displayed.
- Select “new program” with the [∧] or the [∨] key and acknowledge with [◇].
- Enter a program name. The name may include a maximum of 10 characters. The keys have the following functions:

  [+] and [−]: change character at current cursor position.

  [∧] and [∨]: move cursor.

  [◇]: acknowledge entry.
- Select the program to be copied with the [+] or the [−] key. A fixed, a special or a user program can be selected.
  Acknowledge with [◇].

- The user program has now been created, and is identical to the program which was copied. The parameters are now displayed and can be changed as desired.

NOTE

At first, use the preset parameters for fusion current and fusion time (for pre-fusion and fusion) from the copied preset or the special program. If the splicing results obtained with these values are not adequate, see »Optimizing Parameters for Single-mode Fibers« on page 3-18, or see »Optimizing Parameters for Multimode Fibers« on page 3-21.

Significance of the Parameters

The individual parameters have the following significance:

Parameter	Significance	Values
Fiber Type	When the fiber type is changed, the parameters in the user program are overwritten with the standard parameters for the newly selected fiber type. The program name for the user program remains unchanged.	
Z-gap	Distance between the fiber ends prior to fusion.	2.0 to 10.0 µm
Autofeed	Pushing fiber ends together beyond the point of contact (over-travel)	0.0 to 10.0 µm
max. xy-offset	Maximum offset of both fiber ends in x and y axis, without an indication on the display.	5.0 to 15.0 µm, 7.0 µm

Parameter	Significance	Values
Pre-fusion Current	Temperature of the arc during pre-fusion	10.0 to 20.0 mA
Pre-fusion Time	Time between ignition of arc and start of feeding operation	0.0 to 10.0 s
Fusion Current	Temperature of the arc during primary fusion	10.0 to 20.0 mA
Fusion Time	Ignition time during primary fusion	0.0 to 10.0 s
Tensile Test	Testing of the splice for tensile strength. The tensile test is not possible for attenuation splices.	yes / no
Coating Diameter	Change of the insertion position.	250/500/900 µm

Editing and Renaming User Programs

- Open the parameter menu with the [P] key.
- Select the user program to be edited (see »Creating User Programs« on page 3-12) and acknowledge.
- Parameters can now be changed:

  [+] and [−]: change the value of the displayed parameter.

  [◇]: acknowledge and save the changed value.

  [∧] and [∨]: scroll to previous or next parameter, without storing any changes to memory.
- [P]: exit parameter menu.
- The name of the user program can be selected with the [∧] key, and can then be changed in the same way as for the creation off new user programs.

NOTE	Editing and renaming of user programs are only possible if password request has been deactivated, or if the correct password is entered.

Deleting User Programs

- Open the parameter menu and select the user program to be deleted with the [∧] or the [∨] key, but do not acknowledge.
- Press the [−] key and acknowledge deletion of the program with the [◇] key.

NOTE	The deletion of user programs is only possible if password request has been deactivated, or if the correct password is entered.

Data Output Menu

Open menu –› parameters menu –› data output

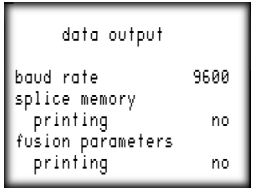

NOTE — Parameters in the data output menu can only be changed or reset if password query has been deactivated, or if the correct password is entered.

Parameter / Function	Significance	Setting Range
Baud Rate	Data transmission speed at the RS 232c interface	150/300/600/1200/ 2400/4800/<u>9600</u> baud
Splice Memory Printing	-	yes / <u>no</u>
Fusion Parameters Printing	-	yes / <u>no</u>

Special Program for TrueWave Fiber

Cleaving Quality TrueWave fiber reacts with great sensitivity to worn or damaged cleavers. If the cleaver is not in flawless condition, splintering occurs in the coating.
As a rule, this damage is not allways visible at the display and is thus not recognized by the splicer. In general, illuminated spots appear during fusion at the splice joint. This results in extremely poor splicing results (0.5 dB and more), which *are* normaly recognized by the splicer. Splintering may be present if the actual cleave angle is still OK (the cleave angle which is measured and displayed by the splicer). This problem may even occur with cleavers which function flawlessly with other types of fiber. Use flawlessly functioning cleavers only.

Optimizing Parameters for Single-mode Fibers

The pre-selected parameters for the preset and special programs are suitable for all common fiber types. Nevertheless, an optimization of the parameters mays become necessary, for example:

- If special fiber types are used which demonstrate unusual characteristics or excessive core eccentricity.
- If work is carried out at an altitude higher than than 4000 m above sea level or if the selected altitude is extremely different (see »Common Parameters« on page 3-5).
- If the ambient temperature deviates greatly from +20˚C.

NOTE — The parameters can only be optimized if the electrodes are in flawless condition.

The procedure described in the following pages for the optimization of parameters is suitable for all common single-mode fibers.

Required Accessories

An attenuation measuring instrument (e.g. an OTDR, Optical Time Domain Reflectometer) should be used whenever possible for the optimization of parameters for single-mode fibers.

NOTE — The attenuation display at the fusion splicer can only provide correct results if the parameters are correctly set. It can therefore only be used for the optimization of parameters to a limited extent. Always use an external attenuation measuring instrument (e.g. OTDR, Optical Time Domain Reflectometer) to check the attenuation results if possible.

General Rules

The following rules apply to practically all single-mode fibers. Deviations from these rules are only necessary for a few special fibers, for example if bubbles are formed.

- The standard parameters are always used for Z gap, auto-feed and pre-fusion time.
- Pre-fusion current and fusion current are always set to the same value.

If bubbles should occur during splicing, see »Bubble Formation« on page 3-21. The corrective measures described there are suitable for single-mode fibers as well.

The only remaining parameters to be optimized are thus current (for pre-fusion and fusion) and fusion time.

Fusion Current and Fusion Time

Fusion current and fusion time have, to a certain extent, the same effect on splicing quality: Increasing the current has approximately the same effect as lengthening the time, i.e. the same results can be achieved with different current/time combinations.

Ambient Temperature

The preset and special programs are based upon an ambient temperature of +20˚C. If the actual ambient temperature varies greatly from this value, cleaning current, pre-fusion current and fusion current must be appropriately adjusted:

At an ambient temperature of *above* +20˚C *reduce* current by 0.4 mA per 10˚C.
At an ambient temperature of *under* +20˚C *increase* current by 0.4 mA per 10˚C.

Procedure

An external attenuation test set is required for this procedure.

- Generate a user program for optimization with the “Standard Single-Mode (SM)” preset program (see »Creating User Programs« on page 3-12
- First produce splices with the default values for fusion current and time. Do not remove the splice from the splicer and do not start the tensile test. Measure the loss with the attenuation test set.

- Press key ^ and initiate with ◇ “Refusion“.
- Measure the loss again.

The parameters are set correctly when the loss worsens slightly relative to the first measurement (by 0.01 to 0.03 dB). If the loss remains unchanged, the fusion current or the time selected was too low. If the loss rises sharply, the current or the time is too high. Change either the current (prefusion current and fusion current) in steps of 0.5 mA or the time in steps of 0.5 s.

Optimizing Parameters for Multimode Fibers

NOTE The parameters can only be optimized if the electrodes are in flawless condition.

In the case of multimode fibers, the optimization of parameters with respect to attenuation is largely non-critical. As opposed to single-mode fibers, it can be assumed that splice attenuation is always good, if the splice demonstrates good visual characteristics. An attenuation measuring instrument is thus not required for optimization.

With multimode fibers, pre-fusion current is generally lower than fusion current. Pre-fusion time is also longer than for single-mode fibers.

The following problems may occur during fusion:

Symptom	Possible Cause	Remedy
Bubble Formation	The splice is severely enlarged and irregular. The splice breaks extremely easily. This problem occurs mainly with fibers with a high core refractive index (e.g. 50 µm core diameter).	Increase pre-fusion time in steps of 0.1 s. At the same time, reduce pre-fusion current in steps of 0.5 mA. If this is not sufficient, reduce fusion current in steps of 0.5 mA.
Incompletely Fused Splices	The bright line in the center of the fiber is interrupted at the splice.	If you are able to obtain an improvement by means of re-fusing, increase fusion time, otherwise increase fusion current.

Symptom	Possible Cause	Remedy
Constriction	In the center of the monitor the fiber appears thinner than at the edges.	Reduce pre-fusion current in steps of 0.5 mA.

4 Splicing

Contents Page

General 4-3
Selecting the Splicing Program 4-3
The Splicing Sequence 4-4
- Cleaning 4-5
- Alignment 4-5
- Fusion 4-6
- Visual Inspection 4-6
- Automatic Splice Loss Estimation 4-6
- Re-Fusing 4-7
- Tensile Test 4-7
- Removing the Splice 4-8

Protecting the Splice 4-8
Splice Memory 4-9
- Activating the Splice Memory 4-9
- Displaying the Splice Memory at the Monitor 4-9
- Deleting the Last Value 4-9

Exiting the Memory Display 4-9
Printing Splice Values 4-9

General

NOTE — Make sure that all required splicing preparations have been performed correctly and completely. If not, perform the necessary preparations to the splicer and the fiber (see chapters 2 and 3).

Each splicing operation includes:

- Arc cleaning of fiber ends.
- Alignment (Z-axis)
- Fusion, with feed along the Z-axis
- Splice evaluation

Selecting the Splicing Program

The various programs and their ranges of application are described in chapter 3 »Parameters and Programs«. With this information you should now be able to select or create, and activate the required program.

- Activate the desired program in the parameters menu.
- Return to the main menu with the [P] key.

The Splicing Sequence

After the fibers have been prepared and inserted (see chapter 2 “Preparations”), the display at your monitor will be similar to the diagram below.

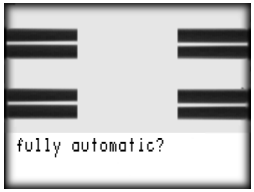

- Press the ◈ key in order to start the splicing sequence. The entire splicing sequence is menu-driven.

Fully automatic

You will normally use the fully automatic splicing sequence. The selected fusion program runs automatically.

Automatic

If visible signs of dirt remain on the fiber after automatic cleaning, terminate the operation with ^ and select automatic mode.

You can clean as often as necessary during this process. If the fiber ends are still not clean after five cleaning cycles, they must be stripped and cut again.

Semi-automatic

For test purposes, select the semi-automatic splicing sequence. In this mode you have to initiate cleaning and positioning in the Z-axis individually.

Manual fiber positioning

For special purposes you can position the optical fibers manually using keys [+] and [−] .

Cleaning

The fiber ends are cleaned with an electric arc.

Alignment

After cleaning an evaluation of fiber endface quality and fiber offset is carried out during alignment.

Endface Quality Inspection

This inspection is performed for all programs with which fibers are spliced in the fully automatic or the automatic mode.

If the video image evaluation system L-PAS detects contamination or Cleave angle deviations of more than 3.5°, the message “bad endfaces - fusing?” appears.

Fiber endfaces which are poorly prepared will yield high splice losses and incorrect splice estimations data. The fibers should be prepared once again in such cases, and the cleaver should be cleaned if necessary. If the fiber cannot be prepared again (e.g. due to minimal fiber length), the operation can continued be by pressing the [◇] key.

Fiber Offset Detection

Dirt on the fiber or in the silicat v-slot may lead to a fiber offset detection which results in a bad splice loss value. When the fiber offset exceeds the adjusted permissible value (see »Significance of the Parameters« on page 3-13) an indication appears on the display.

Fusion

Pre-fusion and fusion of the fibers is performed after alignment.

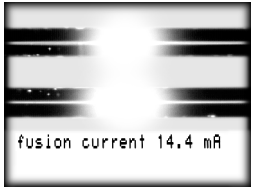

Visual Inspection

The fiber cladding has a smooth surface if the splice is good. The cores, however, are not visible at the monitor. The bright line in the middle of the fiber is a result of the lens effect of the fiber itself. The illustration below shows a good splice.

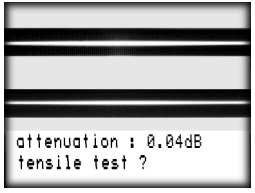

Automatic Splice Loss Estimation

The splice is analyzed after completion of the splicing operation. The splice is inspected for enlargements or constrictions, as well as homogeneity and offset. In the event of a faulty splice, “Bad splice, fuse again?” is displayed at the monitor and re-fusing can be performed.

- Re-fusing is started by pressing the ⏀ key.

If the splice looks fine, splice loss is calculated and displayed in dB. Splice loss estimation provides accurate results if the following prerequisites have been fulfilled:

- The fusion parameters have been set correctly.
- Core eccentricity relative to the outside contour must be minimal.

Chapter 6 provides examples of poor splices, possible causes and appropriate remedies.

Re-Fusing

Re-fusing can be used to optimize parameters and to enhance splicing results, if the selected fusion time was too short, or if fusion current was too low.

- If the [^] key is activated, “Fuse?” or “Fuse again?” appears at the display. This provides you with the opportunity to re-fuse the splice, i.e. to re-ignite the arc. Splice loss is displayed after re-fusing.

Tensile Test

If the tensile test has been activated, the request “Tensile test?” appears at the display after fusion.

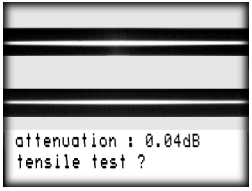

- Press the [◇] key to start the tensile test. If the tensile test should not be performed press [v] key
- “Remove fibers” appears at the display after testing.

NOTE

If the tensile test has been activated, the splice loss value is not stored to the splice memory until after completion of the tensile test. If you open the electrode flap without performing the tensile test, the splice loss value is not stored to memory.

Removing the Splice

For removing the spliced fibers all flaps must be opened. The completed splice should be removed immediately because 5 sec after the elctrode flap has been opened the slides advance to the insertion position.

After the message “fully automatic?” has appeared, the fusion splicer is once again ready for operation.

Protecting the Splice

The coating must be stripped from the ends of the fibers in order to make fusion possible. In order to protect the stripped portion of the fibers, a crimp splice protector or a heat-shrink splice protector must be used. These splice protectors provide the splice with mechanical stability thereby preventing possible damage during subsequent handling.

Crimping device and heat-shrink oven are available as accessories (see chapter 7).

Splice Memory

Activating the Splice Memory

The splice memory can be activated in the parameters menu, see »Configuration« on page 3-10. Up to 250 values can be stored and transmitted via the RS 232c serial interface.

Displaying the Splice Memory at the Monitor

If you scroll through the entire splicing sequence by repeatedly pressing the ⌄ key, the contents of the splice memory are displayed at the monitor.

You can scroll backwards and forwards within the memory with the + and − keys.

Deleting the Last Value

If you have to repeat the last splice you made, you can delete the associated loss value from memory.

- Press the ⌄ key after completion of the fusion process in order to display the contents of the memory.
- Press key ⌄ again, so that the last stored value is displayed. You can now delete the displayed value with the − key.

Exiting the Memory Display

- The display returns to the main menu when the ⌄ key is activated.

Printing Splice Values

- Connect the printer to the serial interface at the fusion splicer with a printer cable (see »Serial Interface« on page 1-6).
- Set the printer and the fusion splicer to the same data transmission speed and select the function “Print splice values” (see »Data Output Menu« on page 3-16). Acknowledge with the ◇ key.

5 Ending of Operation

Contents Page

Switching the Fusion Splicer Off 5-2
Stowing Accessories 5-2

Switching the Fusion Splicer Off

- Simultaneously press the [^] and [v] keys.

  The slides are automatically advanced to the transport position, after which the fusion splicer switches off.

WARNING	Always switch the fusion splicer off at the control panel. If you simply remove the power supply plug, the slides are not advanced to the transport position. This could result in damage to the fusion splicer during transport.

Stowing Accessories

- Remove the power cable from the socket at the power supply.
- Remove any contamination and fiber scraps.
- Close the electrode flap.
- Stow the cables, the tool kit and the accessories in the fusion splicer case (see operating instruction for the fusion splicer case).

6 Troubleshooting and Maintenance

Contents Page

Basic Procedures 6-2
List of Error Messages 6-3
- Error Messages during Start-Up 6-3
- General Error Messages during Operation 6-4
- Error Messages during Fiber Alignment 6-5
- Error Messages during Splice Loss Estimation 6-8
- Splice Memory Error Messages 6-9
- Errors Messages during Printing 6-9

Other Errors 6-10
Maintenance and Care 6-15
- Cleaning and Replacing the Protection Glass 6-15
- Cleaning the V-grooves 6-17
- Cleaning and Replacing the Electrodes 6-18

Basic Procedures

Proceed as following if malfunctions occur or if error messages are displayed at the fusion splicer:

- If an error message occurs only once, repeat the questionable operation step. For example, if the “bad endfaces” message appears, prepare the fibers again.
- If the same problem occurs repeatedly, make sure that you are handling the fibers and operating the fusion splicer as described in the operating instructions.
- If you are unable to ascertain the cause of the fault, or if the fault occurs repeatedly, the following subsection provides you with possible causes for a variety problems, as well as appropriate remedies.
- Some of the remedies described below require utmost care and should only be performed by qualified personnel in a clean working environment.
- Under no circumstances should you attempt to perform repair work which, according to the table, may only be carried out at the service center.

NOTE	The manufacturer assumes no liability for damage which results from improper execution of the following remedies.

NOTE	Error messages are also indicated by means of an acoustic warning signal!

List of Error Messages

The following pages contain explanations of the *error messages* displayed at the monitor, together with notes concerning remedies. The error messages are arranged in the order of the operations during which they might occur.

Please note that several of the error messages may have various causes and symptoms, and may therefore be listed more than once on the following pages.

Error Messages during Start-Up

Error Message	Possible Cause	Remedy
Self-test Error 1	Defective RAM.	Switch off the fusion splicer and switch it back on again. If the fault is repeated, the fusion splicer must be sent to the service center for repair. Notify the service center of the error number displayed.
Error 2	Defective graphic memory.	
Error 3	Defective RAM and graphic memory.	
Error 4	Incorrect digitalization.	
Reference switch left error right error	Left and/or right-hand limit switch has not been actuated. Switch is faulty or slide does not move.	Press the ◈ key. If the error persists, the fusion splicer must be sent to the service center for repair.

	Error Message	Possible Cause	Remedy
	battery discharged! The fusion splicer will be switched off.	The power supply is not connected to the battery and AC power operation is not possible.	Make sure the power supply, battery and fusion splicer are connected properly.
		The power supply is not functioning. The battery is not being charged. The message appears even though the fusion splicer can be operated with AC power.	Make sure that the green charging indicator lamp is lit. If not, check AC power supply.
		The battery is faulty but AC power operation is possible.	Replace the battery.
General Error Messages during Operation	*Program status [X]=...*	Processor crash or software error.	Switch the fusion splicer off and then switch it back on again. If the error persists, the fusion splicer must be sent to the service center for repair. Notify the service center of the error numbers displayed.

Error Messages during Fiber Alignment

Error Message	Possible Cause	Remedy
Z-gap too large or fibers not detected	Fibers inserted incorrectly or wrong cleave length.	Insert the fibers correctly, see »Inserting the Fiber« on page 2-6. The fibers must be centered between the electrodes when the holder flaps are closed.
	No fibers present.	Insert fibers.
Fiber inserted incorrectly	The fiber end could not be found during fiber alignment. The fibers overlap too much, are too long or the cleave lengths are too different.	Insert the fibers correctly, see »Inserting the Fiber« on page 2-6.

Error Message	Possible Cause	Remedy
Fiber not detected	Contaminated optical system.	Remove contamination and coating residue from the protection glass at the optical system, see »Cleaning and Replacing the Protection Glass« on page 6-15.
	Condensation at optical system. The fiber image display is unclear in one or two axes.	Prevent condensation by placing the fusion splicer in a room that is not too cold prior to use. Only leave the electrode flap open as long as absolutely necessary during splicing.
	Fiber end is no longer detected as such by the video system, i.e. the fiber is either extremely dirty or extremely poorly cleaved.	Clean fiber or prepare fiber again.

Error Message	Possible Cause	Remedy
Fiber offset too large *Offset.. µm* The fiber offset is clearly visible prior to alignment.	Fiber contaminated or inserted incorrectly.	Check whether the fiber is clean and correctly inserted in the v-groove. If necessary, prepare the fiber again and insert correctly.
	Fiber guides contaminated or damaged.	Clean the guides, see »Cleaning the V-grooves« on page 6-17.
Fiber contaminated or bad end faces - fusing?	The video system has detected that the total cleave angle exceeds 3.5°, or that the end face is contaminated.	Determine at the monitor which fiber end is faulty. Prepare fibers again.
Fiber offset too large	Fiber contaminated or inserted incorrectly.	Check whether the fiber is clean and inserted correctly into the v-grooves. If necessary, prepare fibers again and insert them correctly.
	Fiber guides contaminated or damaged.	Clean the v-grooves (see »Cleaning the V-grooves« on page 6-17).

	Error Message	Possible Cause	Remedy
	Video digitizer error	Video system electronics not functioning.	Switch off the fusion splicer and switch it back on again. If the error occurs again, the fusion splicer must be repaired at the service center. You can continue working with manual fiber alignment.
Error Messages during Splice Loss Estimation	*Fiber not detected*	Contaminated optical system.	Remove contamination and coating residue from the protection glass at the optical system, see »Cleaning and Replacing the Protection Glass« on page 6-15.
		Condensation at optical system. The fiber image display is unclear in one or two axes.	Prevent condensation by placing the fusion splicer in a room that is not too cold prior to use. Only leave the electrode flap open as long as absolutely necessary during splicing.
		Fiber end is no longer detected as such by the video system (fibers burnt or bubble formation).	Repeat splice.

	Error Message	Possible Cause	Remedy
	Bad splice - fuse again? The actual splice loss may still be OK under certain circumstances.	Pre-fusion parameter values to high.	Reduce pre-fusion current or pre-fusion time. Time may not be set too low.
		Contaminated optical system.	Check the image at the monitor for visible signs of contamination with no fibers inserted. Remove contamination and coating residue from the protection glass of the optical system (see »Cleaning and Replacing the Protection Glass« on page 6-15).
Splice Memory Error Messages	*No data available*	The splice memory is empty.	Make sure that the splice memory has been activated in the parameter menu. To save a displayed loss value acknowledge with ⏀.
Errors Messages during Printing	*Printer not ready!*	The printer connected to the serial interface transmits incorrect control characters.	Check the baud rate at the printer and the fusion splicer. Make sure that the printer supports the XON/XOFF protocol, and the appropriate data format (8 data bits, 1 stop bit, no parity).

Other Errors

The following table describes remedys for errors which are not displayed at the monitor.

Symptom	Possible Cause	Remedy
Battery mode not possible, AC supply mode OK.	The battery is missing or is not connected, or the battery fuse is faulty.	Check that the battery has been correctly installed and that the battery fuse is OK. Install and correctly connect the battery and/or replace the fuse. If the error persists, the fusion splicer must be sent to the service center for repair.
Arc flickers or hisses.	Electrodes dirty or eroded.	Clean or replace electrodes.
The fiber does not melt during the fusion process but buckles instead. The splice point barely lights up during splicing.	Fusion current too low.	Set correct fusion current.
The fiber buckles at the start of the fusion process.	Pre-fusion time is too short or pre-fusion current too low.	Correct pre-fusion parameters. You can use the default values as a starting point.

Symptom	Possible Cause	Remedy
Fibers burn away.	Pre-fusion current or pre-fusion time too high.	Set the parameters (see chapter 3). Try using the fixed program for the appropriate fiber type.
	Auto-feed too small.	
	Fusion current considerably too high.	
Charging indicator lamp is not lit.	No AC power.	Connect the power supply to the electrical outlet.
	Defective power supply.	Service center.

Symptom	Possible Cause	Remedy
Constriction 	Contaminated electrodes. The arc burns irregularly.	Clean electrodes.
	Fusion current too high.	Reduce in steps of 0.2 to 0.3 mA.
	Autofeed too small.	Increase in steps of 1 µm.
	Pre-fusion time too long.	Change only under extraordinary circumstances. Reduce in steps of 0.05 s.
	Pre-fusion current too high.	Change only under extraordinary circumstances. Reduce in steps of 0.1 mA
	Z-gap too wide.	Reduce Z gap in steps of 0.5 µm (do not set below 3 µm).
Enlargement 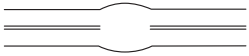	Autofeed too large.	Reduce in steps of 1 µm.

Symptom	Possible Cause	Remedy
Not fused through 	Fusion current too low.	Increase in steps of 0.2 to 0.3 mA.
	Pre-fusion time too short.	Change only under extraordinary circumstances. Increase in steps of 0.05 s.
Bubble or inclusion 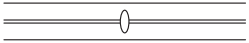	Contaminated end faces prior to splicing.	Clean end faces before fusion! Consider increase cleaning current by 0.2 to 0.3 mA or increase cleaning time by 0.1 s.
	Poor cleave.	Check cleave quality prior to fusion.
	Fusion current too high.	Reduce pre-fusion and fusion current.
	Pre-fusion time/current too low.	Increase pre-fusion time in steps of 0.1 s.

Symptom	Possible Cause	Remedy
Matchheads 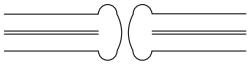	Electrodes contaminated, arc burns irregularly.	Clean electrodes.
	Fusion current is far too high.	Reduce in steps of 0.5 to 1.0 mA.
	Pre-fusion time is far too long.	Set pre-fusion parameters to default values from preset program.
	Pre-fusion current is far too high.	Set pre-fusion parameters to default values from preset program.
	Autofeed too small.	Increase autofeed in steps of 1 µm.
	Z-gap too large.	Reduce Z-gap in steps of 1 µm.

The fusion splicer must be cleaned regularly and kept clean at all times.

Clean the following components at the end of each working day or more often if required:

- V-grooves
- Electrodes
- Cleaver

WARNING	Do not clean the fusion splicer with chemical solvents except alcohol.

Cleaning and Replacing the Protection Glass

The protection glass for the optic system is located beneath the fiber guide. It must always be free of contamination, as well as residual fiber and coating materials.
A new protection glass can be ordered under article number S46999-M7-S468.

Removal

- Switch the splicer off and disconnect it from the power supply. If the attachment battery pack is in use, the rechargeable batteries must be removed as well.
- Remove both electrodes: see »Replacing the Electrodes« on page 6-18.

DANGER	Be certain to observe the safety precautions regarding electrode replacement on page 6-18.

- Turn the set screw (1) out about 3 revolutions with the screwdriver (2.3 mm blade width, included in tool kit).
- Remove the fiber guide (2) with the tweezers included in the tool kit.
- Remove the protection glass (4) with the tweezers.

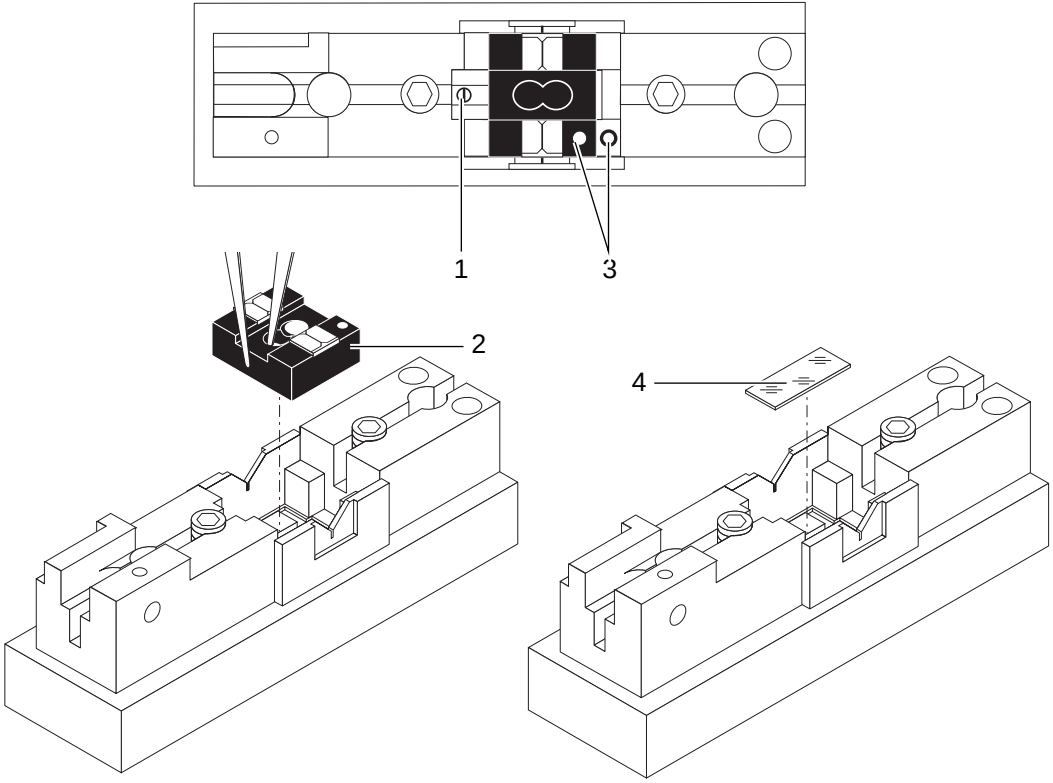
1
3
2
4

- Clean the protection glass (4) with a leather wipe. If the protection glass is excessively contaminated, clean with alcohol or replace.
- Replace the protection glass with the tweezers.

NOTE	Be certain to insert the protection glass into the recess provided for this purpose. No contamination may be present beneath the protection glass (on the achromatic lens)!

- Insert the fiber guide with the tweezers making certain that no contamination is present, and that the guide is properly aligned (the two markings (3) must be adjacent to one another).
- Gently tighten the set screw (1).
- Install the electrodes: see »Replacing the Electrodes« on page 6-18.

Cleaning the V-grooves

The V-grooves must be cleaned if the fibers appear to be significantly out of alignment after insertion, or if the error message “piezo offset error” or “fiber offset error” is displayed.

Clean the v-grooves by blowing them out with clean compressed air. Stubborn contamination can be removed carefully with a wooden toothpick with its tip slightly moistened in alcohol.

DANGER	All alcohol must be removed from within close proximity to the electrodes after cleaning!

WARNING	Never use hard objects to clean the v-grooves!

Cleaning and Replacing the Electrodes

The fusion process causes the electrodes to become contaminated. If they become excessively contaminated, they can no longer function properly. The electrodes function properly:

- when the arc burns regularly, and
- when no hissing sounds are audible during the fusion process.

NOTE	The electrode tips may not be bent or broken. The two electrodes are identical.

Replacing the Electrodes

- Switch the fusion splicer off and disconnect it from the power supply. If the attachment power supply is used take out the battery 2.3 Ah. The fusion splicer automatically cleans the electrodes by means of burnout when it is switched on.

DANGER	The fusion splicer must remain disconnected from the power supply until both electrodes have been correctly installed. The fusion splicer will be damaged if a electrode cleaning arc is triggered without correctly installed electrodes.

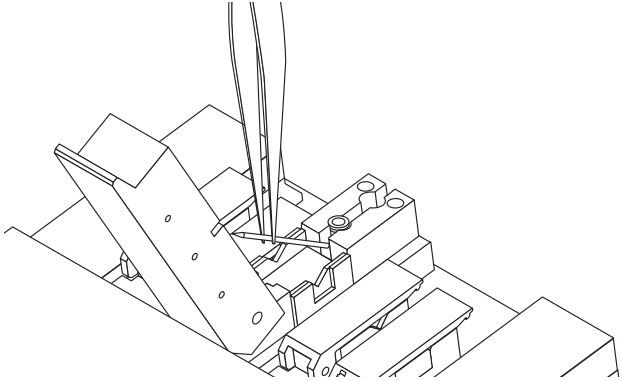

- Open the electrode flap.
- Loosen the bolt about on half turn with the 2.5 mm, special Allen wrench.
- Pull the electrode out.
- Push the new electrode into the holder up to the stud.
- Clamp the electrode with the Allen screw while pushing the electrode against the stud.

CAUTION	Only use the special wrench included with the tool kit.

- Follow the same procedure to replace the second electrode.

Mechanical Cleaning

If the electrodes still do not function properly after they have been burned clean, clean them mechanically. Use only the electrode cleaning tool and the emery cloth included with the tool kit for mechanical cleaning.

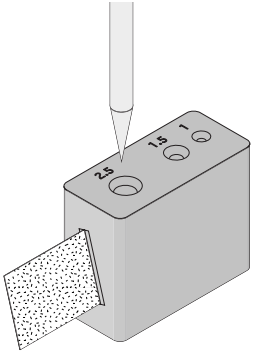

- Place a piece of emery cloth (with the *rough* side up) into the slot at the electrode cleaning tool.
- Remove the electrodes (see »Replacing the Electrodes« on page 6-18).
- Insert the electrode into the cleaning tool and turn it carefully several times.
- Do not touch the tips of the electrodes with your fingers after cleaning.
- Clean the second electrode in the same way.

If cleaning is unsuccessful, or the electrodes are excessively eroded, they must be replaced. Use original electrodes only.

7 Supplements / Changes / Notices







Index

A

AC Power Connection 2-2
Activating the Splice Memory 4-9
Adjusting Monitor Brightness 2-7
Alarm Limit 3-7
Alignment 4-5
Altitude Above Sea Level 3-7
Attachment Power Supply A-2
Autofeed 3-13
Automatic Splice Loss Estimation 4-6

B

Battery 2.3 Ah A-2
Baud Rate 3-16
Bubble Formation 3-21

C

Care 6-15
CCIR 1-6
Checking the Fiber End Faces 2-8
Cleaning 4-5
Cleaning the Fiber Guides 6-17
Cleaving the Fiber 2-5
Connector Socket for Power Supply 1-3
Contamination Detection Sensitivity 3-10
Creating User Programs 3-12
Crimping Device A-3
CS Single-mode Fiber 3-11

D

Deleting User Programs 3-15
Displaying the Splice Memory 4-9
DS Single-mode Fiber 3-11

E

Electrode Cleaning Cycle 3-9

Electrode Cleaning Tool A-4
Electrode Flap 1-4
Electrodes 1-4
Endface Quality Inspection 4-5
Equipment Overview 1-3
Error Messages 6-3
Error Messages during Alignment 6-5
Error Messages during Fiber Positioning 6-5
Error Messages during Operation 6-4
Error Messages during Printing 6-9
Error Messages during Splice Loss Estimation . 6-8
Error Messages, Splice Memory 6-9

F

Fiber Alignment 1-7
Fiber Cleaver A-2
Fiber guides 1-4
Fiber Offset Detection 4-5
Fiber Requirements 1-7
Fiber Type 3-13
Fixed Programs 3-11
Fusion Current 3-19
Fusion Parameters-Printing 3-16
Fusion Splicer Case 2 ..... A-3
Fusion Splicer Case 5 ..... A-3

H

Heat-shrink Oven A-2
Heat-shrink Parameters 3-8
Heat-shrink Temperature 3-8

K

Keyboard 1-5

L

LEAF Fiber 3-11
L-PAS Video Image Evaluation System 1-4
LS Single-mode Fiber 3-11

M

Maintenance 6-15
Monitor 1-5

Mounting Block A-2
Mounting Bracket A-3
Multimode, 50 µm 3-11
Multimode, 62.5 µm 3-11

N

Number of Splices 3-9

O

Operating Hours 3-9
Operating Temperature 1-7
Optical Time Domain Reflectometer 3-18
Optimizing Parameters for Multimode Fibers 3-21
Optimizing Parameters for Single-mode Fibers 3-18
OTDR 3-18

P

Parameter Menu 3-3
Printing Splice Values 4-9
Program Selection 3-11
Protecting the Splice 4-8
Protection Glass 6-15, A-3

R

Replacement Interval 3-9
Replacing the Battery Fuse 6-17
Replacing the Electrodes 6-18
RS 232c 1-6, 3-16, 4-9

S

Serial Interface 1-6
Service Data 3-9
Special Programs 3-11
Splice Memory Printing 3-16
Splice Tray Holder A-2, A-6
Splicing Unit 1-3
Standard Single-mode 3-11
Status Report 3-10
Storage Temperature 1-7
Stripping the Coating 2-4

Switching the Splicer Off 5-2
Switching the Splicer On 2-2

T

Technical Data 1-7
Temperature 3-19
Tensile Test 1-7
Terminals for Additional Functions 1-6
Titanium-Coated Single-mode Fiber 3-11
Transport Case A-3
TrueWave Fiber 3-11, 3-17

U

User Programs 3-12

V

Video Output 1-6, 1-7
Visual Inspection 4-6

W

Work Lamp A-2

Z

Z-gap 3-13

Appendix A: Accessories

In order to assure that documentation for subsequently purchased accessories for your X75 Fusion Splicer is always readily available, we recommend that you attach such documentation at the end of this chapter.

Contents Page

Order Numbers A-2
- Accessories A-2
- Spare Parts A-3
- Consumables / Splice Organization A-4

Zero Modem Cable A-5
- Cable Wiring A-5

Splice Tray Holder A-6

Order Numbers

Accessories

Designation	Order Number	Description
Attachment Power Supply	S46999-M7-S630	For 90 to 260 V AC, for mounting onto the bottom of the fusion splicer, battery 2.3 Ah can be slid in.
Battery 2.3 Ah	S46999-M7-S601	To be slid into attachment power supply, can be changed without tools. Capacity: approx. 30 splices.
Fiber Cleaver	S46999-M9-A8	For cleaving single-mode and multimode fibers.
Mounting Block for A8	S46999-M7-S877	For mounting the A8 onto the splice tray holder S46999-M7-S876.
Splice Tray Holder for Work-station	S46999-M7-S876	With holder for cleaver A8.
Splice Tray Holder	S46999-M7-S378	For all common splice trays.
Heat-shrink Oven	S46999-M7-S385	Adjustable, for heat-shrink splice protectors.
Work Lamp	S46999-M7-S284	
12V Cable	S46999-M7-S957	For car cigarette lighter, 5m.

Accessories

Designation	Order Number	Description
Fusion Splicer Case 2	S46999-M7-V13	For adaption of fusion splicer especially when powered by attachment power supply and various accessories, without work platform.
Fusion Splicer Case 5	S46999-M7-S875	Incl.100 VA power supply in the workstation you can integrated the fusion spicer and optional accessories.
Transport Case	S46999-M26-V2	Case with casters for protection of all fusion splicers of series X7... in fusion splicer case 2.
Mounting Bracket	S46999-M7-S276	For mounting of splice tray holder and crimping device or heat-shrink oven directly to the fusion splicer.
Crimping Device	S46999-M7-S252	For crimping splice protectors for single fibers.

Spare Parts

Designation	Order Number	Description
Electrodes	S46999-M7-S256	1 set (2 ea.).
Protection Glass	S46999-M7-S468	1 ea.

Spare Parts

Designation	Order Number	Description
Electrode Cleaning Tool	S46999-M7-S643	1 ea.
Emery Cloth	S46999-M7-S644	10 ea.
Spare Light Bulb	S46999-M7-S291	For work lamp, 12V / 10W, halogen.

Consumables / Splice Organization

Designation	Order Number	Description
Standard Splice Tray	C46197-A7-A66	Pack of 10
Crimp Splice Protector	S45057-Z1-H590	Pack of 150
Splice Organizer	S46197-A7-A69	Pack of 10, for 12 crimp splice protectors each.
Heat-Shrink Splice Protector	S46999-A16-A4	Pack of 100
Splice Organizer for Heat-Shrink Splice Protectors	S46999-Z12-A1	Pack of 10, for 6 heat-shrink splice protectors each

Zero Modem Cable

The zero modem cable is required in order to print out splice data or splicing parameters from the X75 Fusion Splicer (see »Data Output Menu« of page 3-16).

Cable Wiring

If the original Z modem cable is not used, the cable must be wired as shown below:

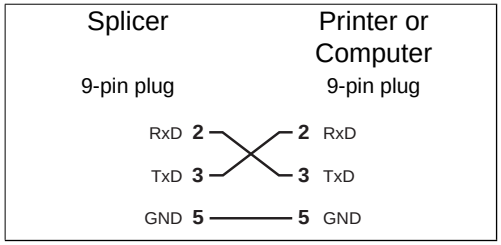

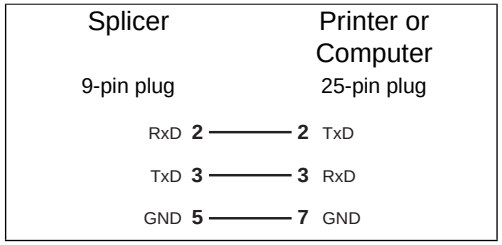

Splice Tray Holder

- Fix the splice tray holder (pos. 1) with both screws (pos. 3) to mounting bracket (pos. 2).
- These set fixing with both screws (pos. 4) on the backside from the splicer.

